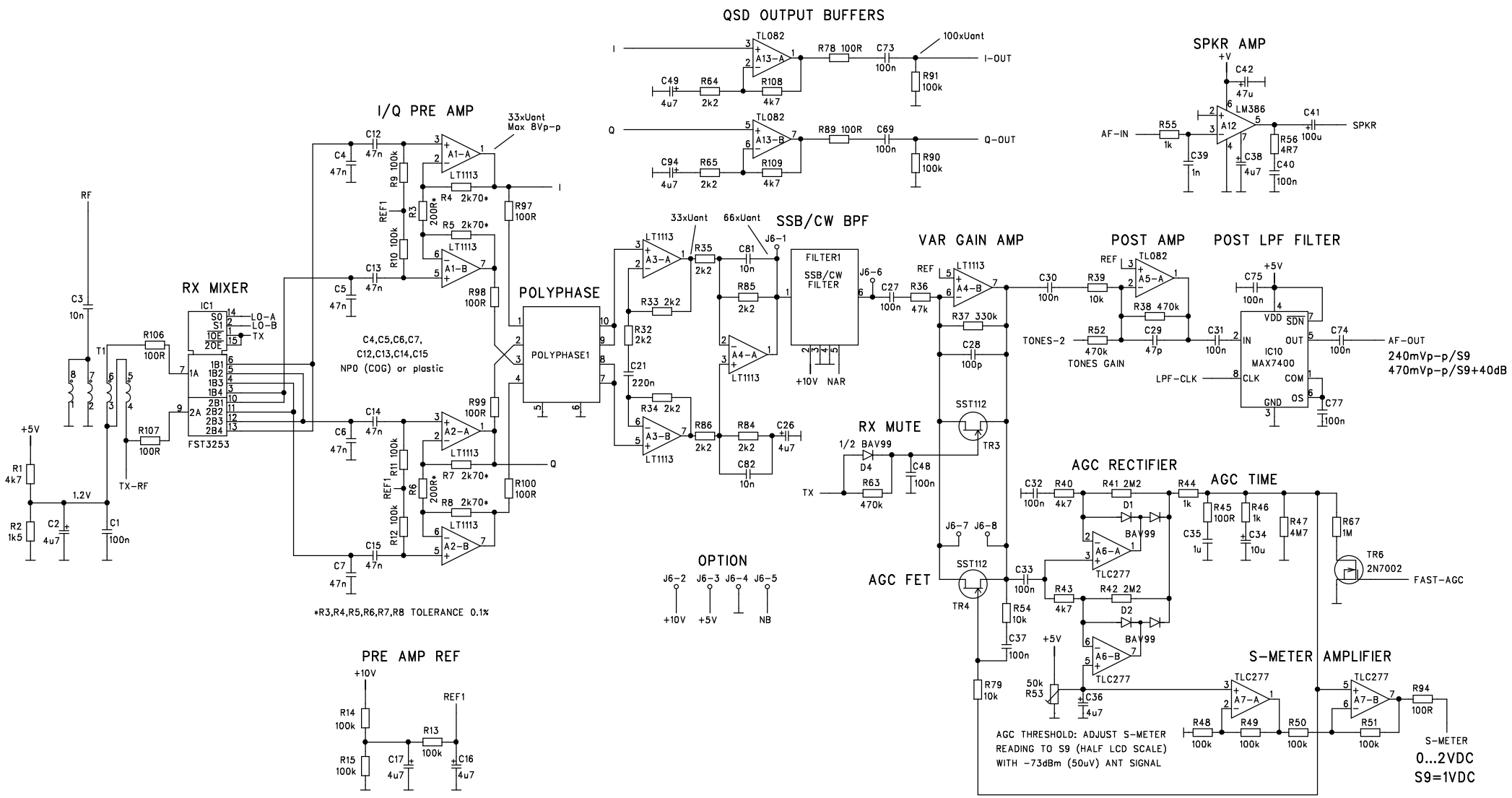

Drawn 2007-11-07	JUMA-TRX2 HF SSB/CW TRANSCEIVER	OH7SV	
Design OH7SV	MAIN BOARD	Rev	B
Sheet 1/3	RX SECTION		

Copyright Matti Hohtola OH7SV 2007. This header must appear unaltered in all publications.