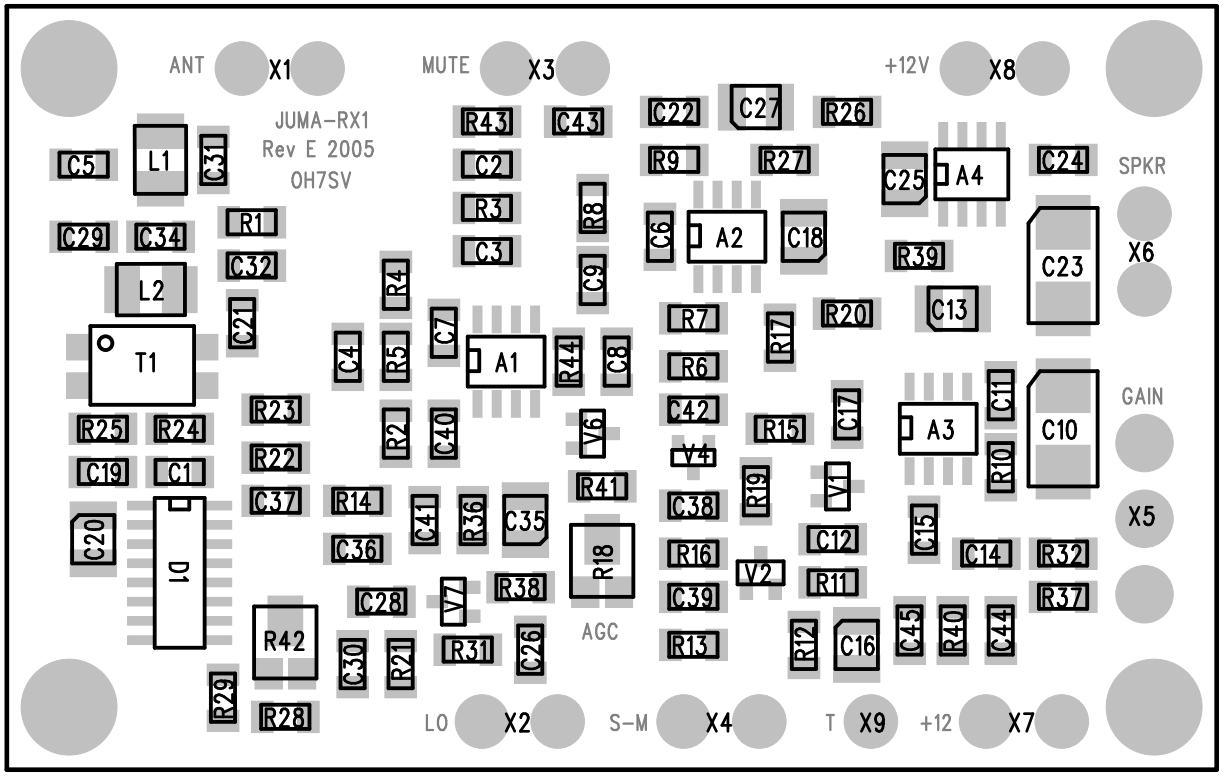
ANT
X1
MUTE
X3
+12V
X8
JUMA-RX1
Rev E 2005
OH7SV
SPKR
X6
GAIN
X5
AGC
LO
X2
S-M
X4
T
X9
+12
X7
C5
L1
C31
C29
C34
R1
C32
L2
C21
T1
R25
R24
C19
C1
C20
D1
R23
R22
C37
R42
R29
R28
R43
C43
C2
R3
C3
R4
C4
R5
C7
A1
R2
C40
R14
C36
C41
R36
C35
C28
V7
R38
C30
R21
R31
C26
R8
C9
R44
C8
V6
R41
R18
C22
C27
R26
R9
R27
C6
A2
C18
R7
R6
C42
V4
C38
R16
C39
R13
R17
R20
R15
R19
V2
R12
C16
C25
A4
R39
C13
C17
A3
V1
C12
R11
C45
R40
C44
C24
C23
C11
C10
R10
C15
C14
R32
R37